NOTES: UNLESS OTHERWISE SPECIFIED

1. POLE ADAPTER ACCOMMODATES ∅65-110mm [2.6-4.3IN]
2. SMALL POLE ADAPTER ASSY - F-SERIES (PN 500-1121-00) MATES DIRECTLY WITH WALL MOUNT ASSY - F-SERIES (PN 500-1123-00)
3. BoM ITEM No. 1 INCLUDES HARDWARE TO ATTACH TWO (2) WALL MOUNT ASSY - F-SERIES (PN 500-1123-00)

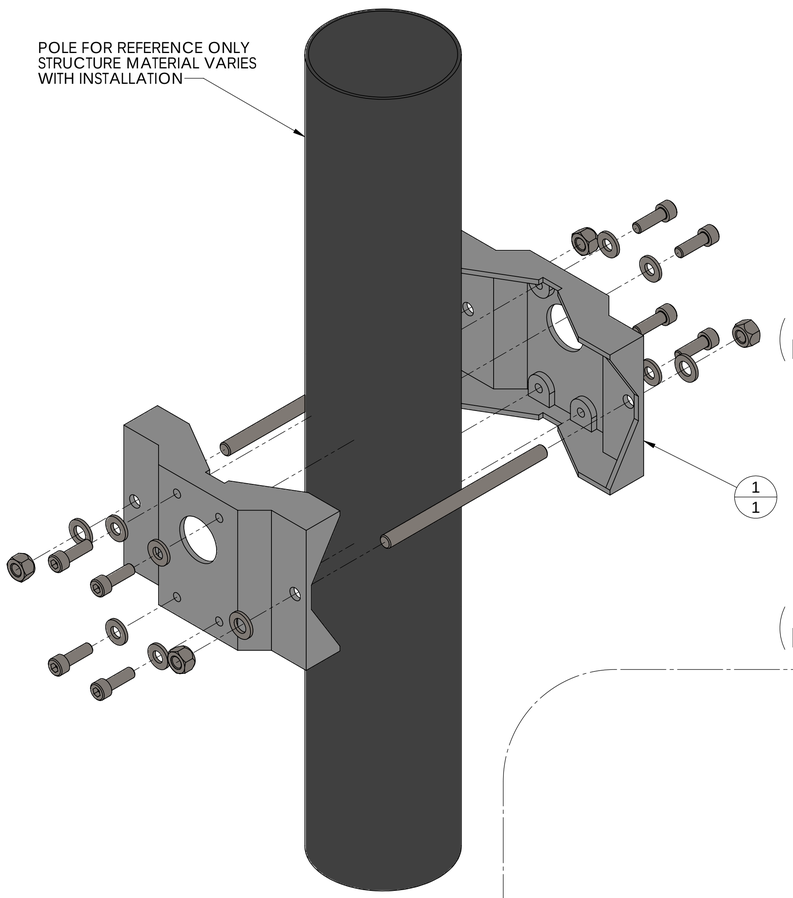

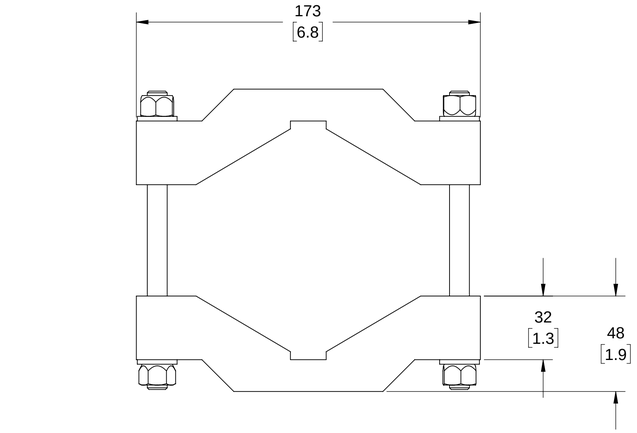

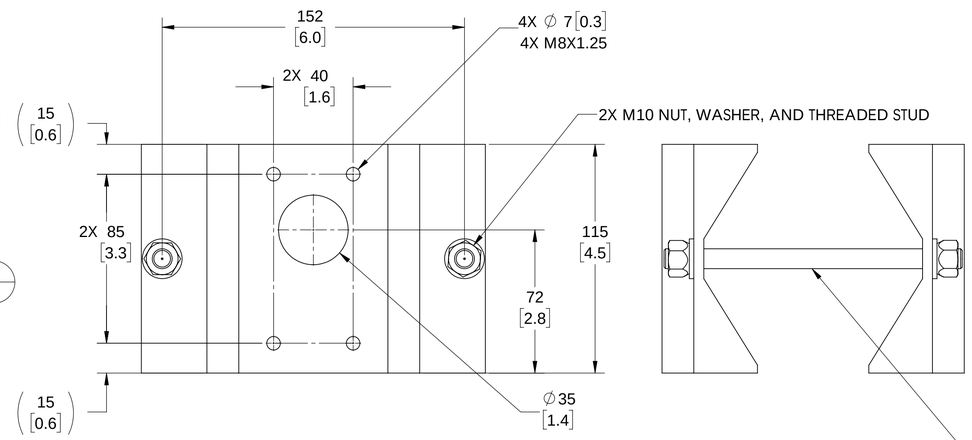

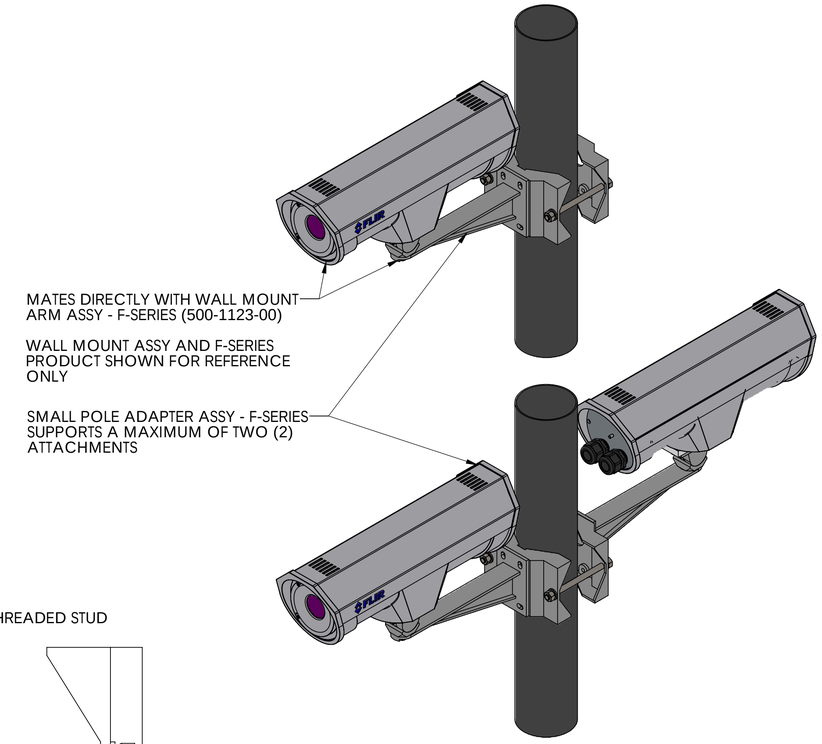

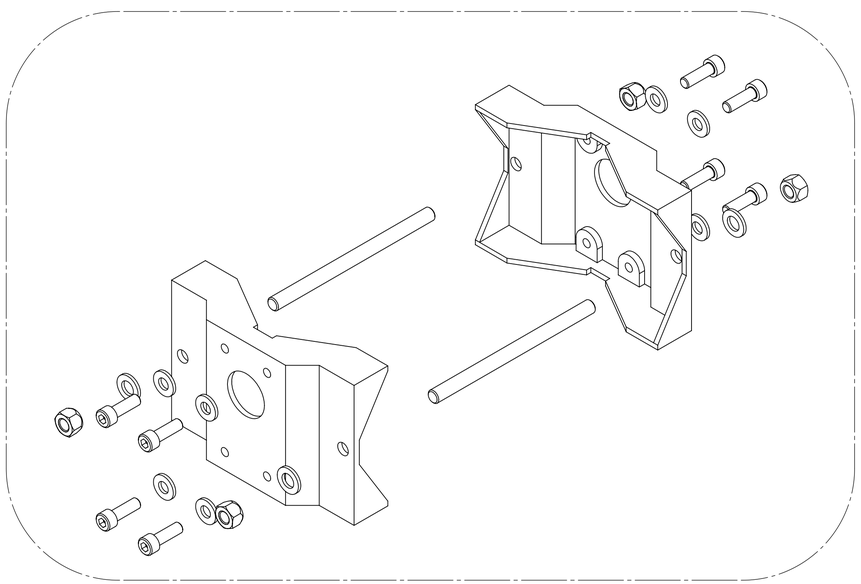

HARDWARE SHOWN ABOVE INCLUDED WITH BoM ITEM No. 1
(4215693 POLE MOUNT ADAPTER - F-SERIES)

QTY.	PART NUMBER	DESCRIPTION	ITEM
1	4215693	Pole Mount Adapter - F-Series	1

Small Pole Adapter Assy - F-Series (PN 500-1121-00) INSTALLATION

Small Pole Adapter Assy F-Series

METRIC

PROPRIETARY - FLIR SYSTEMS, INC.

THIS DOCUMENT IS CONTROLLED TO FLIR TECHNOLOGY LEVEL 2. THE INFORMATION CONTAINED IN THIS DOCUMENT PERTAINS TO A DUAL USE PRODUCT CONTROLLED FOR EXPORT BY THE EXPORT ADMINISTRATION REGULATIONS (EAR). DIVERSION CONTRARY TO US LAW IS PROHIBITED.
US DEPARTMENT OF COMMERCE AUTHORIZATION IS NOT REQUIRED PRIOR TO EXPORT OR TRANSFER TO FOREIGN PERSONS OR PARTIES UNLESS OTHERWISE PROHIBITED.

FLIR Systems, Inc.
6769 Hollister Ave.
Goleta, CA 93117

SIZE	CAGE	PIECE PART	REV
D	064Y2	500-1121-00	A

SCALE 1:5 | PRINTED: 5/29/2018 | SHEET 8 OF 10

SOLIDWORKS MODEL: 500-1121-00 Small Pole Adapter Assy - F-Series
MODEL REVISON: A

DWG NO. 500-1121-00 SH 8 REV A